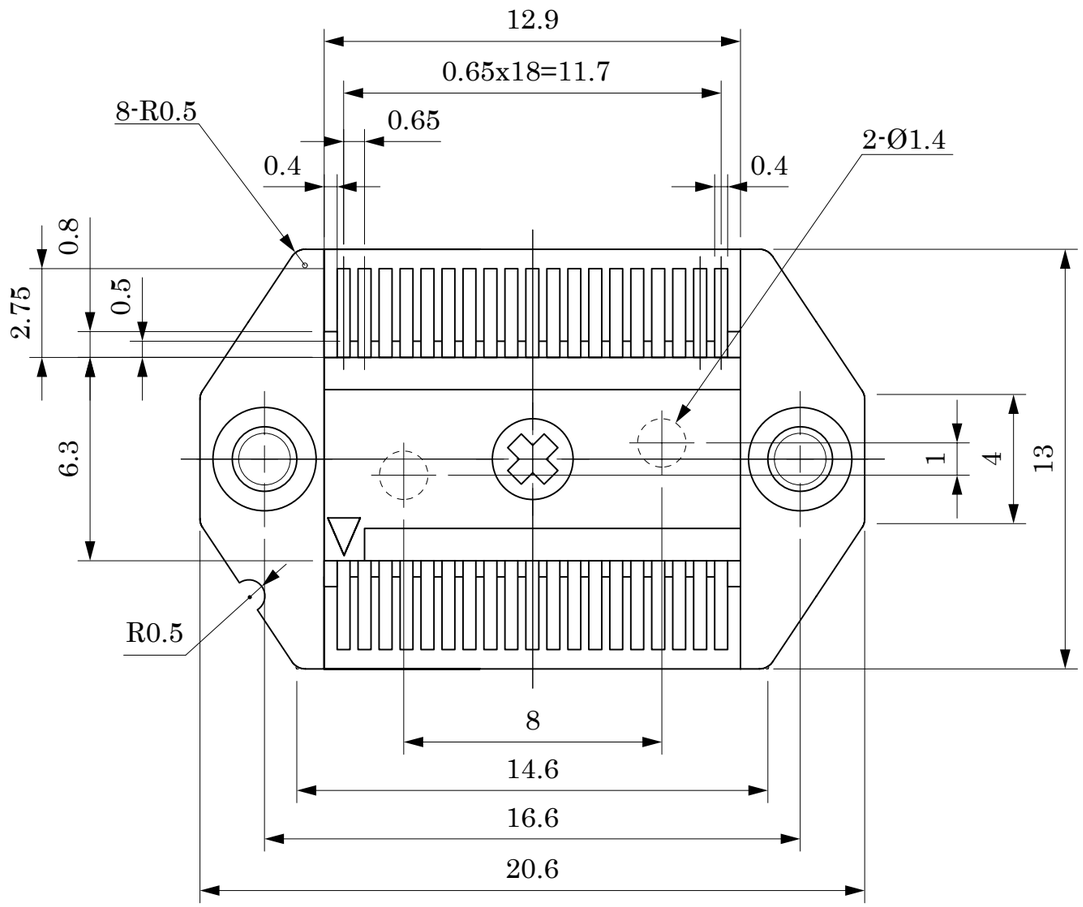

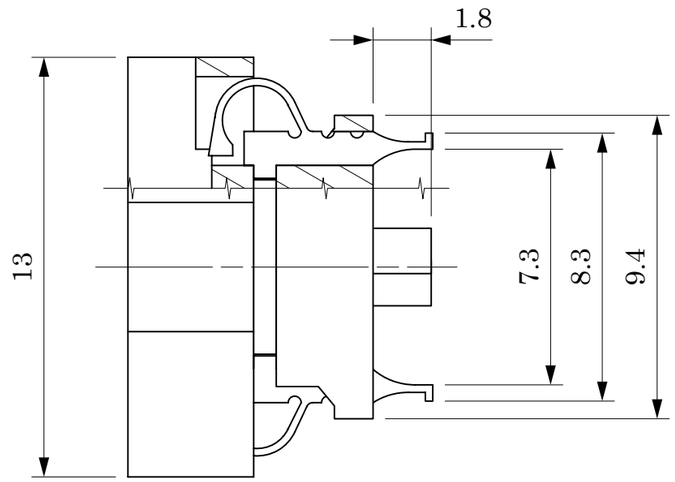

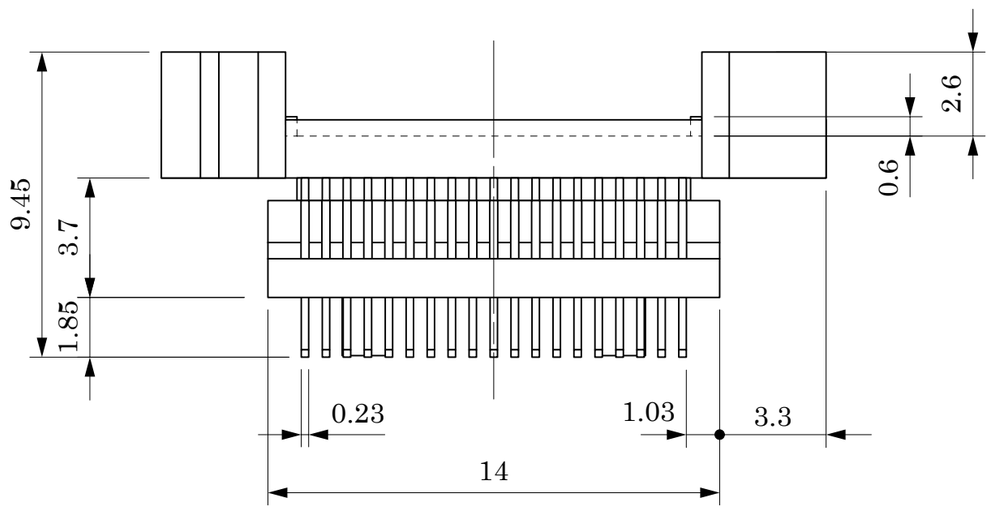

Part No.	38MC-NQ-01T
IC package	Rectangle
Pin count	38Pin
Lead pitch	0.65mm
Unit : mm	Design :